jaquar.com

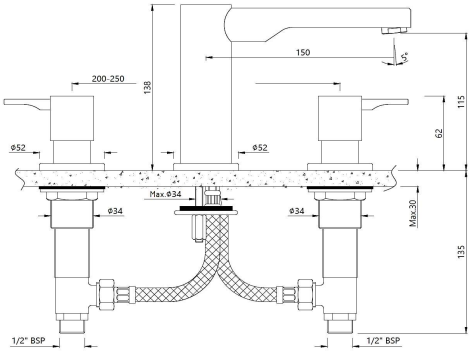

Product Code	FLP-CHR-5189PM
Description	3-Hole Basin Mixer without Popup Waste System
Flow Rate	15.37 LPM @ 3 bar
Flow regulator	By using flow regulators (Product should be ordered with suffix as GA-6.0 LPM, GB-8.0 LPM & GD-3.8 LPM @ 3.0 Bar pressure) one can regulate the flow rate.
Recommended Water Pressure	0.5 Bar - 5 Bar
Brass Specification in Percentage	**Brass Ingots as per IS:1264-1997** Cu (58.0-63.0), Sn (0.0-1.0), Pb (0.5-2.5), Ni (0.0-1.0), Al (0.2-0.8), Mn (0.0-0.5), Total Impurity (0.0-2.0), Zn (Remainder) **Brass Rod as per IS:319-1989** Cu (56.0-59.0), Pb (2.0-3.5), Fe (0.0-0.35), Total Impurity (0.0-0.7), Zn (Remainder) **Brass Pipe as per IS:407-1996** Cu (62.0-65.0), Pb (0.0-0.3), Fe (0.0-0.01), Total Impurity (0.0-0.6), Zn (Remainder) **Brass Sheets as per IS:410-1977** Cu (61.5-64.5), Pb (0.0-0.3), Fe (0.0-0.075), Total Impurity (0.0-0.6), Zn (Remainder)
Cartridge Specification	Fittings : Components have WRAS Approved for food grade conformity with Brass Housing and Spindle Life Cycle EN 200: 200,000 cycles (Standard) - 5.0 LAC Cycles as per EN 200*
Water Tightness	16 bar (Pass)
Pressure Resistance	25 bar (Pass)
Finish	Plating: Nickel-10.0 micron Chromium-0.3 micron Salt Spray (500 hrs + Validated) Adhesion (Pass)
Aerator Size	WRAS, ACS Approved (20X1)
Available Colour Finishing	Black Chrome (BCH) & Black Matt (BLM)

* As per in-house testing done on automatic life cycle testing machine made by Giussani, Italy

DISCLAIMER: Our every effort has been made to ensure factual accuracy, the information presented subject to changes due to requirements in different sites, markets and/ or countries. 10% variation in flow rate may be possible. Jaquar reserves the right to make the necessary amendments at any time without prior notice.